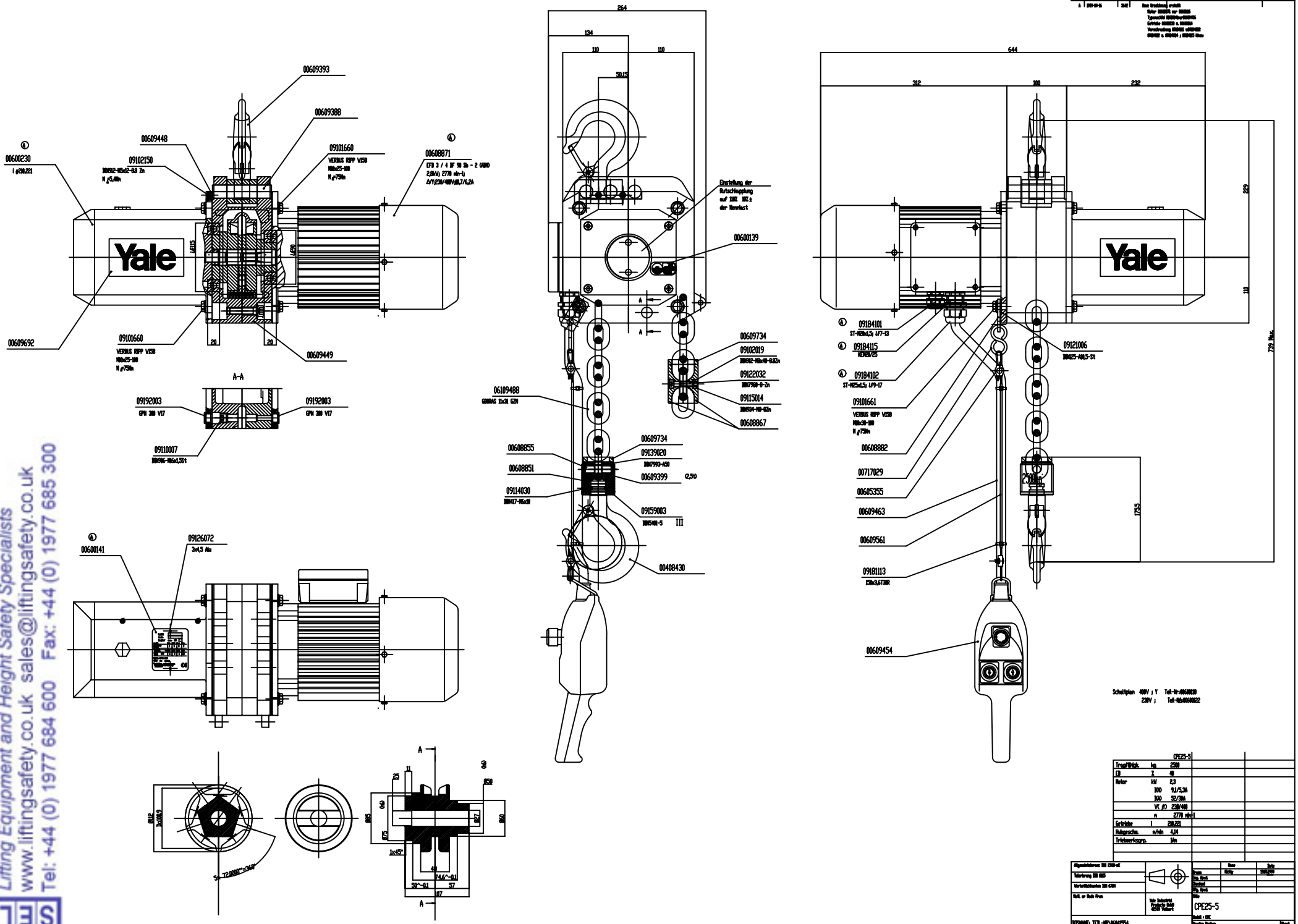

SELBY ENGINEERING & LIFTING SAFETY LTD.
Lifting Equipment and Height Safety Specialists
www.liftingsafety.co.uk sales@liftingsafety.co.uk
Tel: +44 (0) 1977 684 600 Fax: +44 (0) 1977 685 300