McKissick® Construction Blocks

680 Construction Blocks

- Wide Range of product available.
- Capacity: 5 to 100 tons - Larger models available.
- Sheave sizes: 6" to 24" O.D.
- Wire Line Sizes: 3/8" to 1-1/4"
- Equipped with genuine Crosby® forged steel, Quenched and Tempered shackles that contain the patented QUIC-CHECK® markings.
- Design Factor of 4 to 1.
- All 680 Series Blocks are furnished standard with Bronze Bushings.
- All 680 blocks 16" and larger, are furnished with McKissick® Roll Forged® sheaves with flame hardened grooves.
- Sheaves are lubricated through center pin, with a separate lube channel to each bearing.
- Single sheave blocks have thimble dead end.
- Manufactured by an ISO 9001 and API Q1 Certified facility.

Options Available:

- Roller bearing sheaves
- Hanger & Bolt Only models available
- Third party testing with certification
- Galvanized finish - Most models

With Shackle

With Hanger

Bolt Only

SELBY ENGINEERING & LIFTING SAFETY LTD.
Lifting Equipment and Height Safety Specialists
www.liftingsafety.co.uk sales@liftingsafety.co.uk
Tel: +44 (0) 1977 684 600 Fax: +44 (0) 1977 685 300

SEE APPLICATION AND WARNING INFORMATION

Para Español: www.thecrosbygroup.com *On Pages 342 - 349*

Copyright © 2008 The Crosby Group, Inc.
All Rights Reserved

McKissick® Construction Blocks

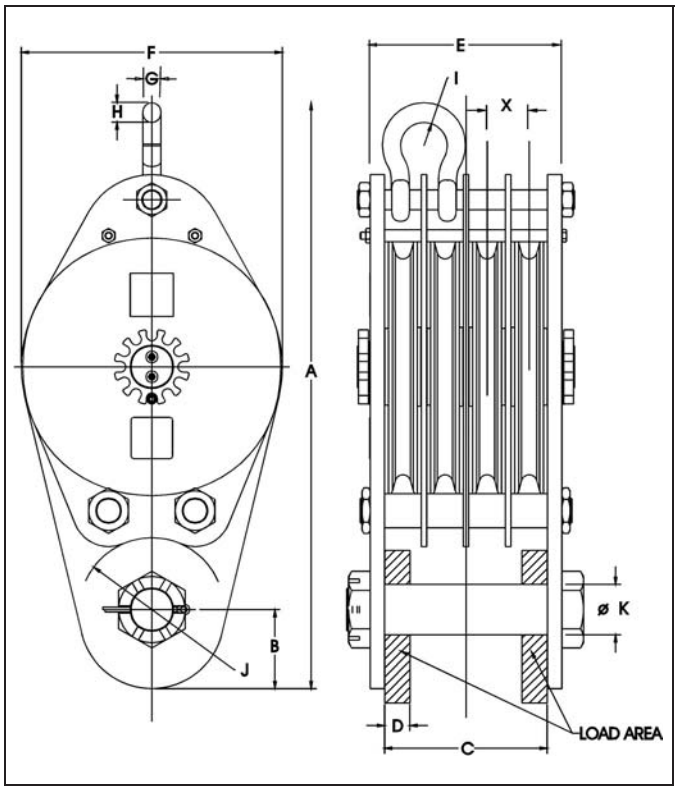

"P" Fitting - Block with Bolt Only

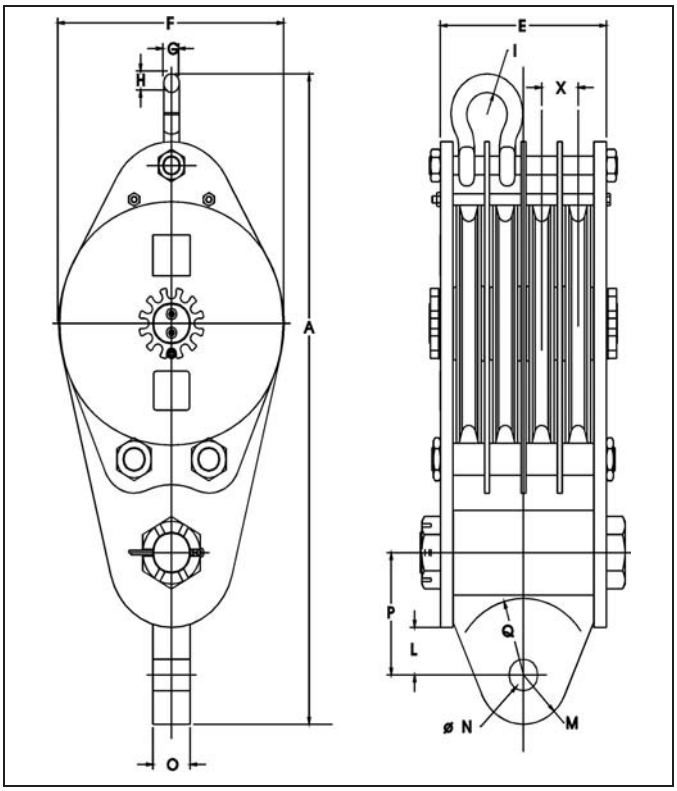

"H" Fitting - Block with Hangers Only

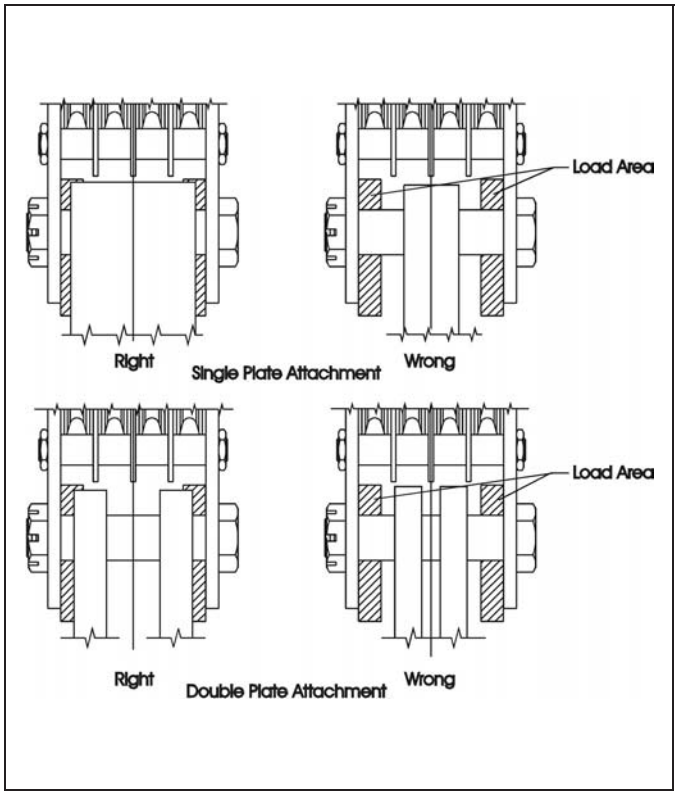

NOTE: The outside of attaching plates must be within the indicated load areas. Means must be provided to keep attaching plates equally spaced from the block side plates.

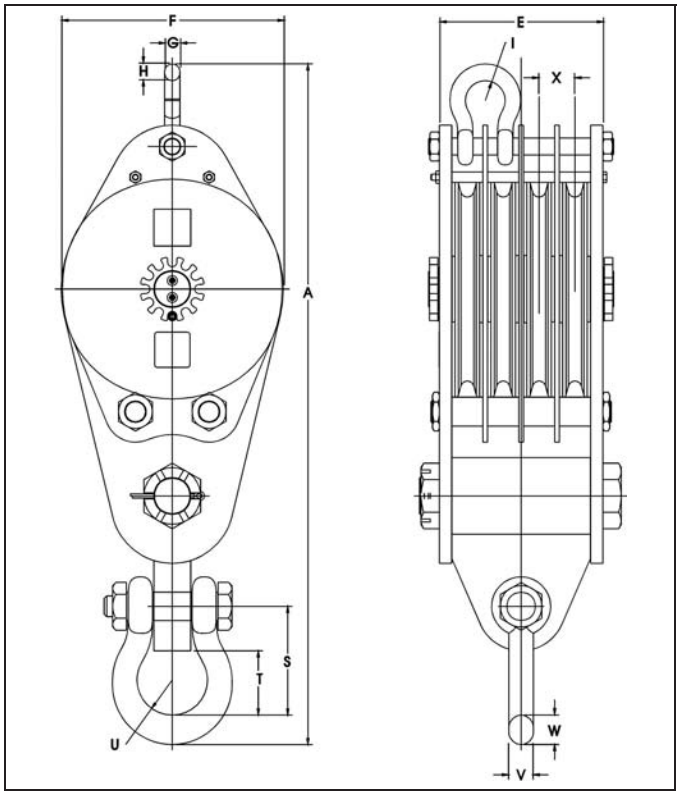

"S" Fitting - Blocks with Hanger and Shackles

McKissick Blocks

Copyright © 2008 The Crosby Group, Inc.
All Rights Reserved

McKissick® Construction Blocks

680 BLOCKS - "P" FITTING

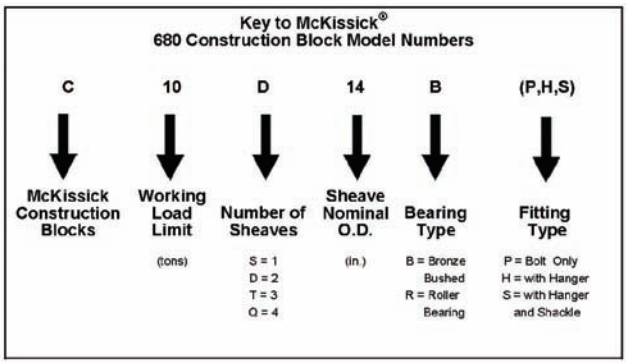

Sheave Diameter (in.)	Wire Line Size (in.)									
	3/8	7/16	1/2	9/16	5/8	3/4	7/8	1	1-1/8	1-1/4
6	■	■	■							
8	■	■	■							
10		■	■	■	■					
12			■	■	■	■				
14			■	■	■	■				
16				■	■	■	■			
18					■	■	■	■		
20						■	■	■	■	
24							■	■	■	■

"P" Fitting - Blocks with Bolt Only - See Drawing on Page 301

- All sizes are **RFID EQUIPPED**.

Model No.	680-P Inquiry Stock No.	Working Load Limit (Tons)	No. of Sheaves	Sheave Diam. (in.)	Blocks with Bolt Only Dimensions (in.)												Weight Each (lbs.)
					A	B	C	D	E	F	G	H	I	J	K	X	
5 Tons																	
C5S6BP	2101000	5	1	6	12.12	1.62	1.78	-	2.28	6.12	-	-	-	2.00	1.25	-	19
C5S8BP	2101002	5	1	8	14.00	1.62	1.78	-	2.28	8.12	-	-	-	2.00	1.25	-	31
C5D6BP	2101010	5	2	6	14.75	1.62	3.81	1.06	4.31	6.12	.63	.69	.84	1.79	1.25	2.03	33
C5D8BP	2101012	5	2	8	16.62	1.62	3.81	1.06	4.31	8.12	.63	.69	.84	1.79	1.25	2.03	54
C5T6BP	2101020	5	3	6	14.75	1.62	5.84	1.06	6.34	6.12	.63	.69	.84	1.79	1.25	2.03	45
C5T8BP	2101022	5	3	8	16.62	1.62	5.84	1.06	6.34	8.12	.63	.69	.84	1.79	1.25	2.03	75
7.5 Tons																	
C7S6BP	2101050	7.5	1	6	12.12	1.62	1.78	-	2.28	6.12	-	-	-	2.00	1.25	-	19
C7S8BP	2101052	7.5	1	8	14.00	1.62	1.78	-	2.28	8.12	-	-	-	2.00	1.25	-	31
C7D6BP	2101060	7.5	2	6	14.75	1.62	3.81	.62	4.31	6.12	.63	.69	.84	1.79	1.25	2.03	33
C7D8BP	2101062	7.5	2	8	16.62	1.62	3.81	.62	4.31	8.12	.63	.69	.84	1.79	1.25	2.03	54
C7T6BP	2101070	7.5	3	6	14.75	1.62	5.84	.62	6.34	6.12	.63	.69	.84	1.79	1.25	2.03	45
C7T8BP	2101072	7.5	3	8	16.62	1.62	5.84	.62	6.34	8.12	.63	.69	.84	1.79	1.25	2.03	75
10 Tons																	
C10S8BP	2101100	10	1	8	15.12	2.12	1.78	-	2.28	8.12	-	-	-	2.38	1.50	-	34
C10S10BP	2101102	10	1	10	17.12	2.12	1.78	-	2.28	10.12	-	-	-	2.38	1.50	-	47
C10S12BP	2101104	10	1	12	19.00	2.12	1.78	-	2.28	12.12	-	-	-	2.38	1.50	-	57
C10S14BP	2101106	10	1	14	21.12	2.12	1.78	-	2.28	14.12	-	-	-	2.38	1.50	-	64
C10D6BP	2101110	10	2	6	15.69	2.12	3.81	.88	4.31	6.12	.63	.69	.84	2.12	1.50	2.03	41
C10D8BP	2101112	10	2	8	17.44	2.12	3.81	.88	4.31	8.12	.63	.69	.84	2.12	1.50	2.03	58
C10D10BP	2101114	10	2	10	19.44	2.12	3.81	.88	4.31	10.12	.63	.69	.84	2.12	1.50	2.03	.82
C10D12BP	2101116	10	2	12	21.31	2.12	3.81	.88	4.31	12.12	.63	.69	.84	2.12	1.50	2.03	.99
C10D14BP	2101118	10	2	14	23.44	2.12	3.81	.88	4.31	14.12	.63	.69	.84	2.12	1.50	2.03	114
C10T8BP	2101120	10	3	8	17.44	2.12	5.84	.88	6.34	8.12	.63	.69	.84	2.12	1.50	2.03	81
C10T10BP	2101122	10	3	10	19.44	2.12	5.84	.88	6.34	10.12	.63	.69	.84	2.12	1.50	2.03	115
C10T12BP	2101124	10	3	12	21.31	2.12	5.84	.88	6.34	12.12	.63	.69	.84	2.12	1.50	2.03	138
C10T14BP	2101126	10	3	14	23.44	2.12	5.84	.88	6.34	14.12	.63	.69	.84	2.12	1.50	2.03	162
C10Q8BP	2101130	10	4	8	17.44	2.12	7.87	.88	8.37	8.12	.63	.69	.84	2.12	1.50	2.03	103
C10Q10B	2101132	10	4	10	19.44	2.12	7.87	.88	8.37	10.12	.63	.69	.84	2.12	1.50	2.03	149
15 Tons																	
C15S10B	2101170	15	1	10	19.19	2.88	2.04	-	3.04	10.12	-	-	-	3.12	2.00	-	76
C15S12BP	2101172	15	1	12	21.06	2.88	2.04	-	3.04	12.12	-	-	-	3.12	2.00	-	92
C15S14SP	2101174	15	1	14	23.06	2.88	2.04	-	3.04	14.12	-	-	-	3.12	2.00	-	111
C15D10BP	2101180	15	2	10	22.19	2.88	4.34	1.25	5.34	10.12	.75	.81	1.00	2.82	2.00	2.30	115
C15D12BP	2101182	15	2	12	24.06	2.88	4.34	1.25	5.34	12.12	.75	.81	1.00	2.82	2.00	2.30	138
C15D14BP	2101184	15	2	14	26.06	2.88	4.34	1.25	5.34	14.12	.75	.81	1.00	2.82	2.00	2.30	168
C15T8BP	2101190	15	3	8	20.19	2.88	6.64	1.25	7.64	8.12	.75	.81	1.00	2.82	2.00	2.30	105
C15T10BP	2101192	15	3	10	22.19	2.88	6.64	1.25	7.64	10.12	.75	.81	1.00	2.82	2.00	2.30	152
C15T12BP	2101194	15	3	12	24.06	2.88	6.64	1.25	7.64	12.12	.75	.81	1.00	2.82	2.00	2.30	1822
C15T14BP	2101196	15	3	14	26.06	2.88	6.64	1.25	7.64	14.12	.75	.81	1.00	2.82	2.00	2.30	214
C15Q10BP	2101200	15	4	10	22.19	2.88	8.94	1.25	9.94	10.12	.75	.81	1.00	2.82	2.00	2.30	209
20 Tons																	
C20S18BP	2101244	20	1	18	27.88	3.00	2.54	.75	4.04	18.12	-	-	-	3.12	2.00	-	203
C20D12BP	2101250	20	2	12	27.69	3.00	4.34	.75	5.84	12.12	.88	.97	1.14	2.82	2.00	2.30	166
C20D14BP	2101252	20	2	14	28.50	3.00	4.34	.75	5.84	14.12	.88	.97	1.14	2.82	2.00	2.30	199

Copyright © 2008 The Crosby Group, Inc.
All Rights Reserved

McKissick® Construction Blocks

Model No.	680-P Inquiry Stock No.	Working Load Limit (Tons)	No. of Sheaves	Sheave Diam. (in.)	Blocks with Bolt Only Dimensions (in.)												Weight Each (lbs.)
					A	B	C	D	E	F	G	H	I	J	K	X	
C20D16BP	2101254	20	2	16	30.75	3.00	4.34	.75	5.84	16.12	.88	.97	1.14	2.82	2.00	2.30	239
C20T10BP	2101260	20	3	10	24.75	3.00	6.64	.75	8.14	10.12	.88	.97	1.14	2.82	2.00	2.30	178
C20T12BP	2101262	20	3	12	26.69	3.00	6.64	.75	8.14	12.12	.88	.97	1.14	2.82	2.00	2.30	207
C20T14BP	2101264	20	3	14	28.50	3.00	6.64	.75	8.14	14.12	.88	.97	1.14	2.82	2.00	2.30	255
C20T16BP	2101266	20	3	16	30.75	3.00	6.64	.75	8.14	16.12	.88	.97	1.14	2.82	2.00	2.30	309
C20Q8BP	2101270	20	4	8	22.56	3.00	8.94	.75	10.44	8.12	.88	.97	1.14	2.82	2.00	2.30	171
C20Q10BP	2101272	20	4	10	24.75	3.00	8.94	.75	10.44	10.12	.88	.97	1.14	2.82	2.00	2.30	219
C20Q12BP	2101274	20	4	12	26.69	3.00	8.94	.75	10.44	12.12	.88	.97	1.14	2.82	2.00	2.30	262
C20Q14BP	2101276	20	4	14	28.50	3.00	8.94	.75	10.44	14.12	.88	.97	1.14	2.82	2.00	2.30	312
25 Tons																	
C25S18BP	2101314	25	1	18	27.88	3.00	2.54	.50	4.04	18.12	-	-	-	3.12	2.00	-	203
C25D12BP	2101320	25	2	12	27.69	3.00	4.34	.50	5.84	12.12	.88	.97	1.14	2.82	2.00	2.30	167
C25D14BP	2101322	25	2	14	28.50	3.00	4.34	.50	5.84	14.12	.88	.97	1.14	2.82	2.00	2.30	198
C25D16BP	2101324	25	2	16	30.75	3.00	4.34	.50	5.84	16.12	.88	.97	1.14	2.82	2.00	2.30	239
C25T10BP	2101330	25	3	10	24.75	3.00	6.64	.50	8.14	10.12	.88	.97	1.14	2.82	2.00	2.30	178
C25T12BP	2101332	25	3	12	26.69	3.00	6.64	.50	8.14	12.12	.88	.97	1.14	2.82	2.00	2.30	207
C25T14BP	2101334	25	3	14	28.50	3.00	6.64	.50	8.14	14.12	.88	.97	1.14	2.82	2.00	2.30	253
C25T16BP	2101336	25	3	16	30.75	3.00	6.64	.50	8.14	16.12	.88	.97	1.14	2.82	2.00	2.30	309
C25Q08BP	2101340	25	4	8	22.56	3.00	8.94	.50	10.44	8.12	.88	.97	1.14	2.82	2.00	2.30	168
C25Q10BP	2101342	25	4	10	24.75	3.00	8.94	.50	10.44	10.12	.88	.97	1.14	2.82	2.00	2.30	222
C25Q12BP	2101344	25	4	12	26.69	3.00	8.94	.50	10.44	12.12	.88	.97	1.14	2.82	2.00	2.30	262
C25Q14BP	2101346	25	4	14	28.50	3.00	8.94	.50	10.44	14.12	.88	.97	1.14	2.82	2.00	2.30	312
30 Tons																	
C30D12BP	2101390	30	2	12	30.12	4.25	5.34	2.06	6.84	12.12	1.00	1.06	1.34	4.20	3.00	2.80	190
C30D14BP	2101392	30	2	14	32.00	4.25	5.34	2.06	6.84	14.12	1.00	1.06	1.34	4.20	3.00	2.80	226
C30D16BP	2101394	30	2	16	34.38	4.25	5.34	2.06	6.84	16.12	1.00	1.06	1.34	4.20	3.00	2.80	267
C30D18BP	2101396	30	2	18	36.12	4.25	5.34	2.06	6.84	18.12	1.00	1.06	1.34	4.20	3.00	2.80	344
C30T10BP	2101400	30	3	10	28.25	4.25	6.64	2.06	8.14	10.12	1.00	1.06	1.34	4.20	3.00	2.30	213
C30T12BP	2101402	30	3	12	30.12	4.25	6.64	2.06	8.14	12.12	1.00	1.06	1.34	4.20	3.00	2.30	239
C30T14BP	2101404	30	3	14	32.00	4.25	6.64	2.06	8.14	14.12	1.00	1.06	1.34	4.20	3.00	2.30	282
C30T16BP	2101406	30	3	16	34.38	4.25	6.64	2.06	8.14	16.12	1.00	1.06	1.34	4.20	3.00	2.30	343
C30Q10BP	2101410	30	4	10	36.12	4.25	8.94	2.06	10.44	10.12	1.00	1.06	1.34	4.20	3.00	2.30	255
C30Q12BP	2101412	30	4	12	30.12	4.25	8.94	2.06	10.44	12.12	1.00	1.06	1.34	4.20	3.00	2.30	291
C30Q14BP	2101414	30	4	14	32.00	4.25	8.94	2.06	10.44	14.12	1.00	1.06	1.34	4.20	3.00	2.30	342
C30Q16BP	2101416	30	4	16	34.38	4.25	8.94	2.06	10.44	16.12	1.00	1.06	1.34	4.20	3.00	2.30	417
35 Tons																	
C35D12BP	2101450	35	2	16	30.12	4.25	5.34	1.69	6.84	12.12	1.00	1.06	1.34	4.20	3.00	2.80	190
C35D14BP	2101452	35	2	16	32.00	4.25	5.34	1.69	6.84	14.12	1.00	1.06	1.34	4.20	3.00	2.80	225
C35D16BP	2101454	35	2	16	34.38	4.25	5.34	1.69	6.84	16.12	1.00	1.06	1.34	4.20	3.00	2.80	267
C35D18BP	2101456	35	2	18	36.12	4.25	5.34	1.69	6.84	18.12	1.00	1.06	1.34	4.20	3.00	2.80	344
C35T10BP	2101460	35	3	10	28.25	4.25	6.64	1.69	8.14	10.12	1.00	1.06	1.34	4.20	3.00	2.30	213
C35T12BP	2101462	35	3	12	30.12	4.25	6.64	1.69	8.14	12.12	1.00	1.06	1.34	4.20	3.00	2.30	239
C35T14BP	2101464	35	3	14	32.00	4.25	6.64	1.69	8.14	14.12	1.00	1.06	1.34	4.20	3.00	2.30	282
C35T16BP	2101466	35	3	16	34.38	4.25	6.64	1.69	8.14	16.12	1.00	1.06	1.34	4.20	3.00	2.30	343
C35Q10BP	2101470	35	4	10	36.12	4.25	8.94	1.69	10.44	10.12	1.00	1.06	1.34	4.20	3.00	2.30	255
C35Q12BP	2101472	35	4	12	30.12	4.25	8.94	1.69	10.44	12.12	1.00	1.06	1.34	4.20	3.00	2.30	291
C35Q14BP	2101474	35	4	14	32.00	4.25	8.94	1.69	10.44	14.12	1.00	1.06	1.34	4.20	3.00	2.30	342
C35Q16BP	2101476	35	4	16	34.38	4.25	8.94	1.69	10.44	16.12	1.00	1.06	1.34	4.20	3.00	2.30	417
40 Tons																	
C40D18BP	2101512	40	2	18	37.00	4.25	5.84	1.25	7.84	18.12	1.13	1.25	1.46	4.20	3.00	3.30	478
C40D20BP	2101514	40	2	20	38.25	4.25	5.84	1.25	7.84	20.12	1.13	1.25	1.46	4.20	3.00	3.30	567
C40D24BP	2101516	40	2	24	42.25	4.25	5.84	1.25	7.84	24.12	1.13	1.25	1.46	4.20	3.00	3.30	746
C40T14BP	2101520	40	3	14	34.25	5.00	6.64	1.25	8.14	14.12	1.13	1.25	1.46	4.20	3.00	2.30	300
C40T16BP	2101522	40	3	16	36.50	5.00	6.64	1.25	8.14	16.12	1.13	1.25	1.46	4.20	3.00	2.30	359
C40T18BP	2101524	40	3	18	37.00	4.25	8.40	1.25	10.40	18.12	1.13	1.25	1.46	4.20	3.00	2.90	581
C40T20BP	2101526	40	3	20	38.25	4.25	8.40	1.25	10.40	20.12	1.13	1.25	1.46	4.20	3.00	2.90	691
C40Q12BP	2101530	40	4	12	32.38	5.00	8.94	1.25	10.44	12.12	1.13	1.25	1.46	4.20	3.00	2.30	318
C40Q14BP	2101532	40	4	14	34.25	5.00	8.94	1.25	10.44	14.12	1.13	1.25	1.46	4.20	3.00	2.30	362
C40Q16BP	2101534	40	4	16	36.50	5.00	8.94	1.25	10.44	16.12	1.13	1.25	1.46	4.20	3.00	2.30	430
C40Q18BP	2101536	40	4	18	37.00	4.25	11.33	1.25	13.33	18.12	1.13	1.25	1.46	4.20	3.00	2.90	683
45 Tons																	
C45D18BP	2101582	45	2	18	37.00	4.25	5.84	1.00	7.84	18.12	1.13	1.25	1.46	4.20	3.00	3.30	478
C45D20BP	2101584	45	2	20	38.25	4.25	5.84	1.00	7.84	20.12	1.13	1.25	1.46	4.20	3.00	3.30	567
C45D24BP	2101586	45	2	24	42.25	4.25	5.84	1.00	7.84	24.12	1.13	1.25	1.46	4.20	3.00	3.30	746
C45T14BP	2101590	45	3	14	34.25	5.00	6.64	1.00	8.14	14.12	1.13	1.25	1.46	4.20	3.00	2.30	300
C45T16BP	2101592	45	3	16	36.50	5.00	6.64	1.00	8.14	16.12	1.13	1.25	1.46	4.20	3.00	2.30	359
C45T18BP	2101594	45	3	18	37.00	4.25	8.40	1.00	10.40	18.12	1.13	1.25	1.46	4.20	3.00	2.90	581
C45T20BP	2101596	45	3	20	38.25	4.25	8.40	1.00	10.40	20.12	1.13	1.25	1.46	4.20	3.00	2.90	691
C45Q12BP	2101600	45	4	12	32.38	5.00	8.94	1.00	10.44	12.12	1.13	1.25	1.46	4.20	3.00	2.30	318
C45Q14BP	2101602	45	4	14	34.25	5.00	8.94	1.00	10.44	14.12	1.13	1.25	1.46	4.20	3.00	2.30	362
C45Q16BP	2101604	45	4	16	36.50	5.00	8.94	1.00	10.44	16.12	1.13	1.25	1.46	4.20	3.00	2.30	430

Copyright © 2008 The Crosby Group, Inc.
All Rights Reserved

McKissick® Construction Blocks

Model No.	680-P Inquiry Stock No.	Working Load Limit (Tons)	No. of Sheaves	Sheave Diam. (in.)	Blocks with Bolt Only Dimensions (in.)												Weight Each (lbs.)
					A	B	C	D	E	F	G	H	I	J	K	X	
C45Q18BP	2101606	45	4	18	37.00	4.25	11.33	1.00	13.33	18.12	1.13	1.25	1.46	4.20	3.00	2.90	683
50 Tons																	
C50D20BP	2101640	50	2	20	42.00	5.50	5.84	1.75	7.84	20.12	1.25	1.38	1.62	4.89	3.50	3.30	614
C50D24BP	2101642	50	2	24	46.00	5.50	5.84	1.75	7.84	24.12	1.25	1.38	1.62	4.89	3.50	3.30	797
C50T18BP	2101650	50	3	18	40.75	5.50	8.40	1.75	10.40	18.12	1.25	1.38	1.62	4.89	3.50	2.90	598
C50T20BP	2101652	50	3	20	42.00	5.50	8.40	1.75	10.40	20.12	1.25	1.38	1.62	4.89	3.50	2.90	710
C50T24BP	2101654	50	3	24	46.00	5.50	8.40	1.75	10.40	24.12	1.25	1.38	1.62	4.89	3.50	2.90	923
C50Q16BP	2101660	50	4	16	38.62	5.50	11.33	1.75	13.33	16.12	1.25	1.38	1.62	4.89	3.50	2.90	598
C50Q18BP	2101662	50	4	18	40.75	5.50	11.33	1.75	13.33	18.12	1.25	1.38	1.62	4.89	3.50	2.90	748
55 Tons																	
C55D20BP	2101700	55	2	20	42.00	5.50	5.84	1.56	7.84	20.12	1.25	1.38	1.62	4.89	3.50	3.30	614
C55D24BP	2101702	55	2	24	46.00	5.50	5.84	1.56	7.84	24.12	1.25	1.38	1.62	4.89	3.50	3.30	797
C55T18BP	2101710	55	3	18	40.75	5.50	8.40	1.56	10.40	18.12	1.25	1.38	1.62	4.89	3.50	2.90	598
C55T20BP	2101712	55	3	20	42.00	5.50	8.40	1.56	10.40	20.12	1.25	1.38	1.62	4.89	3.50	2.90	710
C55T24BP	2101714	55	3	24	46.00	5.50	8.40	1.56	10.40	24.12	1.25	1.38	1.62	4.89	3.50	2.90	923
C55Q16BP	2101720	55	4	16	38.62	5.50	11.33	1.56	13.33	16.12	1.25	1.38	1.62	4.89	3.50	2.90	598
C55Q18BP	2101722	55	4	18	40.75	5.50	11.33	1.56	13.33	18.12	1.25	1.38	1.62	4.89	3.50	2.90	748
60 Tons																	
C60T18BP	2101760	60	3	18	40.75	5.50	8.40	1.38	10.40	18.12	1.25	1.38	1.62	4.89	3.50	2.90	598
C60T20BP	2101762	60	3	20	42.00	5.50	8.40	1.38	10.40	20.12	1.25	1.38	1.62	4.89	3.50	2.90	710
C60T24BP	2101764	60	3	24	46.00	5.50	8.40	1.38	10.40	24.12	1.25	1.38	1.62	4.89	3.50	2.90	923
C60Q18BP	2101770	60	4	18	40.75	5.50	11.33	1.38	13.33	18.12	1.25	1.38	1.62	4.89	3.50	2.90	748
C60Q20BP	2101772	60	4	20	42.00	5.50	11.33	1.38	13.33	20.12	1.25	1.38	1.62	4.89	3.50	2.90	898
C60Q24BP	2101774	60	4	24	46.00	5.50	11.33	1.38	13.33	24.12	1.25	1.38	1.62	4.89	3.50	2.90	1108
65 Tons																	
C65T18BP	2101810	65	3	18	40.75	5.50	8.40	1.19	10.40	18.12	1.25	1.38	1.62	4.89	3.50	2.90	598
C65T20BP	2101812	65	3	20	42.00	5.50	8.40	1.19	10.40	20.12	1.25	1.38	1.62	4.89	3.50	2.90	710
C65T24BP	2101814	65	3	24	46.00	5.50	8.40	1.19	10.40	24.12	1.25	1.38	1.62	4.89	3.50	2.90	923
C65Q18BP	2101820	65	4	18	40.75	5.50	11.33	1.19	13.33	18.12	1.25	1.38	1.62	4.89	3.50	2.90	748
C65Q20BP	2101822	65	4	20	42.00	5.50	11.33	1.19	13.33	20.12	1.25	1.38	1.62	4.89	3.50	2.90	898
C65Q24BP	2101824	65	4	24	46.00	5.50	11.33	1.19	13.33	24.12	1.25	1.38	1.62	4.89	3.50	2.90	1108
70 Tons																	
C70T20BP	2101830	70	3	20	46.25	7.00	9.14	1.75	11.14	20.12	1.38	1.50	1.82	5.58	4.00	3.30	890
C70Q20BP	2101840	70	4	20	46.25	7.00	11.31	1.75	13.31	20.12	1.38	1.50	1.82	5.58	4.00	2.90	935
C70Q24BP	2101842	70	4	24	50.25	7.00	11.31	1.75	13.31	24.12	1.38	1.50	1.82	5.58	4.00	2.90	1260
C70QN20BP	2101850	70	5	20	46.25	7.00	9.14	1.75	18.23	20.12	1.38	1.50	1.82	5.58	4.00	3.30	1305
C70QN24BP	2101852	70	5	24	50.25	7.00	9.14	1.75	18.23	24.12	1.38	1.50	1.82	5.58	4.00	3.30	1715
80 Tons																	
C80T20BP	2101860	80	3	20	46.25	7.00	9.14	1.44	11.14	20.12	1.38	1.50	1.82	5.58	4.00	3.30	890
C80Q20BP	2101870	80	4	20	46.25	7.00	11.31	1.44	13.31	20.12	1.38	1.50	1.82	5.58	4.00	2.90	1000
C80Q24BP	2101872	80	4	24	50.25	7.00	11.31	1.44	13.31	24.12	1.38	1.50	1.82	5.58	4.00	2.90	1260
C80QN20BP	2101880	80	5	20	46.25	7.00	9.14	1.44	18.23	20.12	1.38	1.50	1.82	5.58	4.00	3.30	1305
C80QN24BP	2101882	80	5	24	50.25	7.00	9.14	1.44	18.23	24.12	1.38	1.50	1.82	5.58	4.00	3.30	1715
90 Tons																	
C90Q20BP	2101920	90	4	20	46.25	7.50	11.31	1.19	13.81	20.12	1.38	1.50	1.82	5.58	4.00	2.90	1060
C90Q24BP	2101922	90	4	24	50.75	7.50	11.31	1.19	13.81	24.12	1.38	1.50	1.82	5.58	4.00	2.90	1420
C90QN20BP	2101930	90	5	20	46.75	7.50	9.14	1.19	18.23	20.12	1.38	1.50	1.82	5.58	4.00	3.30	1305
C90QN24BP	2101932	90	5	24	50.75	7.50	9.14	1.19	18.23	24.12	1.38	1.50	1.82	5.58	4.00	3.30	1775
100 Tons																	
C100QN20BP	2101970	100	5	20	46.75	7.50	9.14	1.00	18.23	20.12	1.38	1.50	1.82	5.58	4.00	3.30	1305
C100QN24BP	2101972	100	5	24	50.75	7.50	9.14	1.00	18.23	24.12	1.38	1.50	1.82	5.58	4.00	3.30	1775
C100SX20BP	2101980	100	6	20	46.75	7.50	11.31	1.00	20.41	20.12	1.38	1.50	1.82	5.58	4.00	2.90	1365
C100SX24BP	2101982	100	6	24	50.75	7.50	11.31	1.00	20.41	24.12	1.38	1.50	1.82	5.58	4.00	2.90	1855

Copyright © 2008 The Crosby Group, Inc.
All Rights Reserved

680 BLOCKS - "H" FITTING

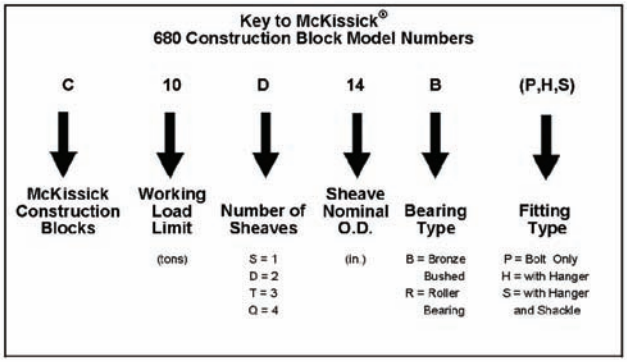

Sheave Diameter (in.)	Wire Line Size (in.)									
	3/8	7/16	1/2	9/16	5/8	3/4	7/8	1	1-1/8	1-1/4
6	■	■	■							
8	■	■	■							
10		■	■	■	■					
12			■	■	■	■				
14			■	■	■	■				
16				■	■	■	■			
18					■	■	■	■		
20						■	■	■	■	
24							■	■	■	■

"H" Fitting - Blocks with Hanger - See Drawing on Page 301

- All sizes are **RFID EQUIPPED**.

Model No.	680-H Inquiry Stock No.	Working Load Limit (Tons)	No. of Sheaves	Sheave Diam. (in.)	Blocks with Hangers - Dimensions (in.)													Weight Each (lbs.)
					A	E	F	G	H	I	L	M	N	O	P	Q	X	
5 Tons																		
C5S6BH	2102000	5	1	6	15.00	2.28	6.12	-	-	-	1.63	1.25	1.06	1.16	3.25	1.86	-	22
C5S8BH	2102002	5	1	8	16.88	2.28	8.12	-	-	-	1.63	1.25	1.06	1.16	3.25	1.86	-	34
C5D6BH	2102010	5	2	6	17.62	4.31	6.12	.63	.69	.84	1.63	1.25	1.06	1.16	3.25	2.25	2.03	37
C5D8BH	2102012	5	2	8	19.50	4.31	8.12	.63	.69	.84	1.63	1.25	1.06	1.16	3.25	2.25	2.03	58
C5T6BH	2102020	5	3	6	17.62	6.34	6.12	.63	.69	.84	1.63	1.25	1.06	1.16	3.25	2.25	2.03	51
C5T8BH	2102022	5	3	8	19.50	6.34	8.12	.63	.69	.84	1.63	1.25	1.06	1.16	3.25	2.25	2.03	81
7.5 Tons																		
C7S6BH	2102050	7.5	1	6	15.00	2.28	6.12	-	-	-	1.63	1.25	1.06	1.16	3.25	1.86	-	22
C7S8BH	2102052	7.5	1	8	16.88	2.28	8.12	-	-	-	1.63	1.25	1.06	1.16	3.25	1.86	-	34
C7D6BH	2102060	7.5	2	6	17.62	4.31	6.12	.63	.69	.84	1.63	1.25	1.06	1.16	3.25	2.25	2.03	37
C7D8BH	2102062	7.5	2	8	19.50	4.31	8.12	.63	.69	.84	1.63	1.25	1.06	1.16	3.25	2.25	2.03	58
C7T6BH	2102070	7.5	3	6	17.62	6.34	6.12	.63	.69	.84	1.63	1.25	1.06	1.16	3.25	2.25	2.03	51
C7T8BH	2102072	7.5	3	8	19.50	6.34	8.12	.63	.69	.84	1.63	1.25	1.06	1.16	3.25	2.25	2.03	81
10 Tons																		
C10S8BH	2102100	10	1	8	18.38	2.28	8.12	-	-	-	1.88	1.38	1.31	1.69	4.00	2.08	-	39
C10S10BH	2102102	10	1	10	20.38	2.28	10.12	-	-	-	1.88	1.38	1.31	1.69	4.00	2.08	-	52
C10S12BH	2102104	10	1	12	22.25	2.28	12.12	-	-	-	1.88	1.38	1.31	1.69	4.00	2.08	-	62
C10S14BH	2102106	10	1	14	24.38	2.28	14.12	-	-	-	1.88	1.38	1.31	1.69	4.00	2.08	-	69
C10D6BH	2102110	10	2	6	18.94	4.31	6.12	.63	.69	.84	1.88	1.38	1.31	1.69	4.00	2.68	2.03	44
C10D8BH	2102112	10	2	8	20.69	4.31	8.12	.63	.69	.84	1.88	1.38	1.31	1.69	4.00	2.68	2.03	65
C10D10BH	2102114	10	2	10	22.69	4.31	10.12	.63	.69	.84	1.88	1.38	1.31	1.69	4.00	2.68	2.03	89
C10D12BH	2102116	10	2	12	24.56	4.31	12.12	.63	.69	.84	1.88	1.38	1.31	1.69	4.00	2.68	2.03	106
C10D14BH	2102118	10	2	14	26.69	4.31	14.12	.63	.69	.84	1.88	1.38	1.31	1.69	4.00	2.68	2.03	121
C10T8BH	2102120	10	3	8	20.69	6.34	8.12	.63	.69	.84	1.88	1.38	1.31	1.69	4.00	3.47	2.03	90
C10T10BH	2102122	10	3	10	22.69	6.34	10.12	.63	.69	.84	1.88	1.38	1.31	1.69	4.00	3.47	2.03	124
C10T12BH	2102124	10	3	12	24.56	6.34	12.12	.63	.69	.84	1.88	1.38	1.31	1.69	4.00	3.47	2.03	147
C10T14BH	2102126	10	3	14	26.69	6.34	14.12	.63	.69	.84	1.88	1.38	1.31	1.69	4.00	3.47	2.03	171
C10Q8BH	2102130	10	4	8	20.69	8.37	8.12	.63	.69	.84	1.88	1.38	1.31	1.69	4.00	3.62	2.03	115
C10Q10BH	2102132	10	4	10	22.69	8.37	10.12	.63	.69	.84	1.88	1.38	1.31	1.69	4.00	3.62	2.03	161
15 Tons																		
C15S10BH	2102170	15	1	10	23.69	3.04	10.12	-	-	-	2.62	1.88	1.56	2.12	5.50	2.81	-	86
C15S12BH	2102172	15	1	12	25.56	3.04	12.12	-	-	-	2.62	1.88	1.56	2.12	5.50	2.81	-	102
C15S14BH	2102174	15	1	14	27.56	3.04	14.12	-	-	-	2.62	1.88	1.56	2.12	5.50	2.81	-	121
C15D10BH	2102180	15	2	10	26.69	5.34	10.10	.75	.81	1.00	2.62	1.88	1.56	2.12	5.50	3.40	2.30	131
C15D12BH	2102182	15	2	12	28.56	5.34	12.12	.75	.81	1.00	2.62	1.88	1.56	2.12	5.50	3.40	2.30	154
C15D14BH	2102184	15	2	14	30.56	5.34	14.12	.75	.81	1.00	2.62	1.88	1.56	2.12	5.50	3.40	2.30	184
C15T8BH	2102190	15	3	8	24.69	7.64	8.12	.75	.81	1.00	2.62	1.88	1.56	2.12	5.50	3.88	2.30	127
C15T10BH	2102192	15	3	10	26.69	7.64	10.12	.75	.81	1.00	2.62	1.88	1.56	2.12	5.50	3.88	2.30	174
C15T12BH	2102194	15	3	12	28.56	7.64	12.12	.75	.81	1.00	2.62	1.88	1.56	2.12	5.50	3.88	2.30	204
C15T14BH	2102196	15	3	14	30.56	7.64	14.12	.75	.81	1.00	2.62	1.88	1.56	2.12	5.50	3.88	2.30	236
C15Q10BH	2102200	15	4	10	26.69	9.94	10.12	.75	.81	1.00	2.62	1.88	1.56	2.12	5.50	3.88	2.30	216
20 Tons																		
C20S18BH	2102244	20	1	18	32.25	4.04	18.12	-	-	-	2.50	1.88	1.69	2.12	5.50	2.80	-	215

Copyright © 2008 The Crosby Group, Inc.
All Rights Reserved

McKissick® Construction Blocks

Model No.	680-H Inquiry Stock No.	Working Load Limit (Tons)	No. of Sheaves	Sheave Diam. (in.)	Blocks with Hangers - Dimensions (in.)													Weight Each (lbs.)
					A	E	F	G	H	I	L	M	N	O	P	Q	X	
C20D12BH	2102250	20	2	12	32.06	5.84	12.12	.88	.97	1.14	2.50	1.88	1.69	2.12	5.50	3.31	2.30	182
C20D14BH	2102252	20	2	14	32.88	5.84	14.12	.88	97	1.14	2.50	1.88	1.69	2.12	5.50	3.31	2.30	214
C20D16BH	2102254	20	2	16	35.16	5.84	16.12	.88	97	1.14	2.50	1.88	1.69	2.12	5.50	3.31	2.30	254
C20T10BH	2102260	20	3	10	29.12	8.14	10.12	.88	97	1.14	2.50	1.88	1.69	2.12	5.50	3.88	2.30	200
C20T12BH	2102262	20	3	12	31.06	8.14	12.12	.88	97	1.14	2.50	1.88	1.69	2.12	5.50	3.88	2.30	229
C20T14BH	2102264	20	3	14	32.88	8.14	14.12	.88	97	1.14	2.50	1.88	1.69	2.12	5.50	3.88	2.30	275
C20T16BH	2102266	20	3	16	35.12	8.14	16.12	.88	97	1.14	2.50	1.88	1.69	2.12	5.50	3.88	2.30	329
C20Q8BH	2102270	20	4	8	26.94	10.44	8.12	.88	97	1.14	2.50	1.88	1.69	2.12	5.50	3.88	2.30	196
C20Q10BH	2102272	20	4	10	29.12	10.44	10.12	.88	97	1.14	2.50	1.88	1.69	2.12	5.50	3.88	2.30	247
C20Q12BH	2102274	20	4	12	31.06	10.44	12.12	.88	97	1.14	2.50	1.88	1.69	2.12	5.50	3.88	2.30	287
C20Q14BH	2102276	20	4	14	32.88	10.44	14.12	.88	97	1.14	2.50	1.88	1.69	2.12	5.50	3.88	2.30	337
25 Tons																		
C25S18BH	2102314	25	1	18	32.25	4.04	18.12	-	-	-	2.50	1.88	1.69	2.12	5.50	2.80	-	215
C25D12BH	2102320	25	2	12	32.06	5.84	12.12	.88	.97	1.14	2.50	1.88	1.69	2.12	5.50	3.31	2.30	182
C25D14BH	2102322	25	2	14	32.88	5.84	14.12	.88	.97	1.14	2.50	1.88	1.69	2.12	5.50	3.31	2.30	214
C25D16BH	2102324	25	2	16	35.16	5.84	16.12	.88	.97	1.14	2.50	1.88	1.69	2.12	5.50	3.31	2.30	254
C25T10BH	2102330	25	3	10	29.12	8.14	10.12	.88	.97	1.14	2.50	1.88	1.69	2.12	5.50	3.88	2.30	200
C25T12BH	2102332	25	3	12	31.06	8.14	12.12	.88	.97	1.14	2.50	1.88	1.69	2.12	5.50	3.88	2.30	229
C25T14BH	2102334	25	3	14	32.88	8.14	14.12	.88	.97	1.14	2.50	1.88	1.69	2.12	5.50	3.88	2.30	275
C25T16BH	2102336	25	3	16	35.12	8.14	16.12	.88	.97	1.14	2.50	1.88	1.69	2.12	5.50	3.88	2.30	329
C25Q8BH	2102340	25	4	8	26.94	10.44	8.12	.88	.97	1.14	2.50	1.88	1.69	2.12	5.50	3.88	2.30	196
C25Q10BH	2102342	25	4	10	29.12	10.44	10.12	.88	.97	1.14	2.50	1.88	1.69	2.12	5.50	3.88	2.30	247
C25Q12BH	2102344	25	4	12	31.06	10.44	12.12	.88	.97	1.14	2.50	1.88	1.69	2.12	5.50	3.88	2.30	287
C25Q14BH	2102346	25	4	14	32.88	10.44	14.12	.88	.97	1.14	2.50	1.88	1.69	2.12	5.50	3.88	2.30	337
30 Tons																		
C30D12BH	2102390	30	2	12	35.38	6.84	12.12	1.00	1.06	1.34	2.75	2.50	1.69	2.25	7.00	3.83	2.80	224
C30D14BH	2102392	30	2	14	37.25	6.84	14.12	1.00	1.06	1.34	2.75	2.50	1.69	2.25	7.00	3.83	2.80	260
C30D16BH	2102394	30	2	16	39.62	6.84	16.12	1.00	1.06	1.34	2.75	2.50	1.69	2.25	7.00	3.83	2.80	302
C30D18BH	2102396	30	2	18	41.38	6.84	18.12	1.00	1.06	1.34	2.75	2.50	1.69	2.25	7.00	3.83	2.80	379
C30T10BH	2102400	30	3	10	33.50	8.14	10.12	1.00	1.06	1.34	2.75	2.50	1.69	2.25	7.00	4.25	2.30	253
C30T12BH	2102402	30	3	12	35.38	8.14	12.12	1.00	1.06	1.34	2.75	2.50	1.69	2.25	7.00	4.25	2.30	279
C30T14BH	2102404	30	3	14	37.25	8.14	14.12	1.00	1.06	1.34	2.75	2.50	1.69	2.25	7.00	4.25	2.30	322
C30T16BH	2102406	30	3	16	39.62	8.14	16.12	1.00	1.06	1.34	2.75	2.50	1.69	2.25	7.00	4.25	2.30	384
C30Q10BH	2102410	30	4	10	41.38	10.44	10.12	1.00	1.06	1.34	2.75	2.50	1.69	2.25	7.00	4.25	2.30	306
C30Q12BH	2102412	30	4	12	35.38	10.44	12.12	1.00	1.06	1.34	2.75	2.50	1.69	2.25	7.00	4.25	2.30	342
C30Q14BH	2102414	30	4	14	37.25	10.44	14.12	1.00	1.06	1.34	2.75	2.50	1.69	2.25	7.00	4.25	2.30	393
C30Q16BH	2102416	30	4	16	39.62	10.44	16.12	1.00	1.06	1.34	2.75	2.50	1.69	2.25	7.00	4.25	2.30	469
35 Tons																		
C35D12BH	2102450	35	2	12	35.38	6.84	12.12	1.00	1.06	1.34	2.75	2.50	1.69	2.25	7.00	3.83	2.80	224
C35D14BH	2102452	35	2	14	37.25	6.84	14.12	1.00	1.06	1.34	2.75	2.50	1.69	2.25	7.00	3.83	2.80	260
C35D16BH	2102454	35	2	16	39.62	6.84	16.12	1.00	1.06	1.34	2.75	2.50	1.69	2.25	7.00	3.83	2.80	302
C35D18BH	2102456	35	2	18	41.38	6.84	18.12	1.00	1.06	1.34	2.75	2.50	1.69	2.25	7.00	3.83	2.80	379
C35T10BH	2102460	35	3	10	33.50	8.14	10.12	1.00	1.06	1.34	2.75	2.50	1.69	2.25	7.00	4.25	2.30	253
C35T12BH	2102462	35	3	12	35.38	8.14	12.12	1.00	1.06	1.34	2.75	2.50	1.69	2.25	7.00	4.25	2.30	279
C35T14BH	2102464	35	3	14	37.25	8.14	14.12	1.00	1.06	1.34	2.75	2.50	1.69	2.25	7.00	4.25	2.30	322
C35T16BH	2102466	35	3	16	39.62	8.14	16.12	1.00	1.06	1.34	2.75	2.50	1.69	2.25	7.00	4.25	2.30	384
C35Q10BH	2102470	35	4	10	41.38	10.44	10.12	1.00	1.06	1.34	2.75	2.50	1.69	2.25	7.00	4.25	2.30	306
C35Q12BH	2102472	35	4	12	35.38	10.44	12.12	1.00	1.06	1.34	2.75	2.50	1.69	2.25	7.00	4.25	2.30	342
C35Q14BH	2102474	35	4	14	37.25	10.44	14.12	1.00	1.06	1.34	2.75	2.50	1.69	2.25	7.00	4.25	2.30	393
C35Q16BH	2102476	35	4	16	39.62	10.44	16.12	1.00	1.06	1.34	2.75	2.50	1.69	2.25	7.00	4.25	2.30	469
40 Tons																		
C40D18BH	2102512	40	2	18	42.88	7.84	18.12	1.13	1.25	1.46	3.00	2.88	2.06	2.75	7.25	4.19	3.30	528
C40D20BH	2102514	40	2	20	44.12	7.84	20.12	1.13	1.25	1.46	3.00	2.88	2.06	2.75	7.25	4.19	3.30	617
C40D24BH	2102516	40	2	24	48.12	7.84	24.12	1.13	1.25	1.46	3.00	2.88	2.06	2.75	7.25	4.19	3.30	796
C40T14BH	2102520	40	3	14	40.12	8.14	14.12	1.13	1.25	1.46	3.00	2.88	2.06	2.75	8.00	4.47	2.30	356
C40T16BH	2102522	40	3	16	42.38	8.14	16.12	1.13	1.25	1.46	3.00	2.88	2.06	2.75	8.00	4.47	2.30	416
C40T18BH	2102524	40	3	18	42.88	10.40	18.12	1.13	1.25	1.46	3.00	2.88	2.06	2.75	7.25	4.50	2.90	646
C40T20BH	2102526	40	3	20	44.12	10.40	20.12	1.13	1.25	1.46	3.00	2.88	2.06	2.75	7.25	4.50	2.90	756
C40Q12BH	2102530	40	4	12	38.25	10.44	12.12	1.13	1.25	1.46	3.00	2.88	2.06	2.75	8.00	5.25	2.30	388
C40Q14BH	2102532	40	4	14	40.12	10.44	14.12	1.13	1.25	1.46	3.00	2.88	2.06	2.75	8.00	5.25	2.30	432
C40Q16BH	2102534	40	4	16	42.38	10.44	16.12	1.13	1.25	1.46	3.00	2.88	2.06	2.75	8.00	5.25	2.30	501
C40Q18BH	2102536	40	4	18	42.88	13.33	18.12	1.13	1.25	1.46	3.00	2.88	2.06	2.75	7.25	4.50	2.90	766
45 Tons																		
C45D18BH	2102582	45	2	18	42.88	7.84	18.12	1.13	1.25	1.46	3.00	2.88	2.06	2.75	7.25	4.19	3.30	528
C45D20BH	2102584	45	2	20	44.12	7.84	20.12	1.13	1.25	1.46	3.00	2.88	2.06	2.75	7.25	4.19	3.30	617
C45D24BH	2102586	45	2	24	48.12	7.84	24.12	1.13	1.25	1.46	3.00	2.88	2.06	2.75	7.25	4.19	3.30	796
C45T14BH	2102590	45	3	14	40.12	8.14	14.12	1.13	1.25	1.46	3.00	2.88	2.06	2.75	8.00	4.47	2.30	356
C45T16BH	2102592	45	3	16	42.38	8.14	16.12	1.13	1.25	1.46	3.00	2.88	2.06	2.75	8.00	4.47	2.30	416
C45T18BH	2102594	45	3	18	42.88	10.40	18.12	1.13	1.25	1.46	3.00	2.88	2.06	2.75	7.25	4.50	2.90	646
C45T20BH	2102596	45	3	20	44.12	10.40	20.12	1.13	1.25	1.46	3.00	2.88	2.06	2.75	7.25	4.50	2.90	756
C45Q12BH	2102600	45	4	12	38.25	10.44	12.12	1.13	1.25	1.46	3.00	2.88	2.06	2.75	8.00	5.25	2.30	388

Copyright © 2008 The Crosby Group, Inc.
All Rights Reserved

McKissick® Construction Blocks

Model No.	680-H Inquiry Stock No.	Working Load Limit (Tons)	No. of Sheaves	Sheave Diam. (in.)	Blocks with Hangers - Dimensions (in.)													Weight Each (lbs.)
					A	E	F	G	H	I	L	M	N	O	P	Q	X	
C45Q14BH	2102602	45	4	14	40.12	10.44	14.12	1.13	1.25	1.46	3.00	2.88	2.06	2.75	8.00	5.25	2.30	432
C45Q16BH	2102604	45	4	16	42.38	10.44	16.12	1.13	1.25	1.46	3.00	2.88	2.06	2.75	8.00	5.25	2.30	501
C45Q18BH	2102606	45	4	18	42.88	13.33	18.12	1.13	1.25	1.46	3.00	2.88	2.06	2.75	7.25	4.50	2.90	766
50 Tons																		
C50D20BH	2102640	50	2	20	48.75	7.84	20.12	1.25	1.38	1.62	3.50	3.25	2.31	3.00	9.00	4.56	3.30	688
C50D24BH	2102642	50	2	24	52.75	7.84	24.12	1.25	1.38	1.62	3.50	3.25	2.31	3.00	9.00	4.56	3.30	871
C50T18BH	2102650	50	3	18	47.50	10.40	18.12	1.25	1.38	1.62	3.50	3.25	2.31	3.00	9.00	5.47	2.90	700
C50T20BH	2102652	50	3	20	48.75	10.40	20.12	1.25	1.38	1.62	3.50	3.25	2.31	3.00	9.00	5.47	2.90	812
C50T24BH	2102654	50	3	24	52.75	10.40	24.12	1.25	1.38	1.62	3.50	3.25	2.31	3.00	9.00	5.47	2.90	1025
C50Q16BH	2102660	50	4	16	45.38	13.33	16.12	1.25	1.38	1.62	3.50	3.25	2.31	3.00	9.00	5.88	2.90	728
C50Q18BH	2102662	50	4	18	47.50	13.33	18.12	1.25	1.38	1.62	3.50	3.25	2.31	3.00	9.00	5.88	2.90	878
55 Tons																		
C55D20BH	2102700	55	2	20	48.75	7.84	20.12	1.25	1.38	1.62	3.50	3.25	2.31	3.00	9.00	4.56	3.30	688
C55D24BH	2102702	55	2	24	52.75	7.84	24.12	1.25	1.38	1.62	3.50	3.25	2.31	3.00	9.00	4.56	3.30	871
C55T18BH	2102710	55	3	18	47.50	10.40	18.12	1.25	1.38	1.62	3.50	3.25	2.31	3.00	9.00	5.47	2.90	700
C55T20BH	2102712	55	3	20	48.75	10.40	20.12	1.25	1.38	1.62	3.50	3.25	2.31	3.00	9.00	5.47	2.90	812
C55T24BH	2102714	55	3	24	52.75	10.40	24.12	1.25	1.38	1.62	3.50	3.25	2.31	3.00	9.00	5.47	2.90	1025
C55Q16BH	2102720	55	4	16	45.38	13.33	16.12	1.25	1.38	1.62	3.50	3.25	2.31	3.00	9.00	5.88	2.90	728
C55Q18BH	2102722	55	4	18	47.00	13.33	18.12	1.25	1.38	1.62	3.50	3.25	2.31	3.00	9.00	5.88	2.90	878
60 Tons																		
C60T18BH	2102760	60	3	18	47.88	10.40	18.12	1.25	1.38	1.62	3.50	3.63	2.31	3.00	9.00	5.47	2.90	700
C60T20BH	2102762	60	3	20	49.12	10.40	20.12	1.25	1.38	1.62	3.50	3.63	2.31	3.00	9.00	5.47	2.90	812
C60T24BH	2102764	60	3	24	53.12	10.40	24.12	1.25	1.38	1.62	3.50	3.63	2.31	3.00	9.00	5.47	2.90	1025
C60Q18BH	2102770	60	4	18	47.88	13.33	18.12	1.25	1.38	1.62	3.50	3.63	2.31	3.00	9.00	5.88	2.90	878
C60Q20BH	2102772	60	4	20	49.12	13.33	20.12	1.25	1.38	1.62	3.50	3.63	2.31	3.00	9.00	5.88	2.90	1028
C60Q24BH	2102774	60	4	24	53.12	13.33	24.12	1.25	1.38	1.62	3.50	3.63	2.31	3.00	9.00	5.88	2.90	1238
65 Tons																		
C65T18BH	2102810	65	3	18	47.88	10.40	18.12	1.25	1.38	1.62	3.50	3.63	2.31	3.00	9.00	5.47	2.90	700
C65T20BH	2102812	65	3	20	49.12	10.40	20.12	1.25	1.38	1.62	3.50	3.63	2.31	3.00	9.00	5.47	2.90	812
C65T24BH	2102814	65	3	24	53.12	10.40	24.12	1.25	1.38	1.62	3.50	3.63	2.31	3.00	9.00	5.47	2.90	1025
C65Q18BH	2102820	65	4	18	47.88	13.33	18.12	1.25	1.38	1.62	3.50	3.63	2.31	3.00	9.00	5.88	2.90	878
C65Q20BH	2102822	65	4	20	49.12	13.33	20.12	1.25	1.38	1.62	3.50	3.63	2.31	3.00	9.00	5.88	2.90	1028
C65Q24BH	2102824	65	4	24	53.12	13.33	24.12	1.25	1.38	1.62	3.50	3.63	2.31	3.00	9.00	5.88	2.90	1238
70 Tons																		
C70T20BH	2102830	70	3	20	55.38	11.14	20.12	1.38	1.50	1.82	4.50	4.62	2.81	3.75	11.50	6.41	3.30	1070
C70Q20BH	2102840	70	4	20	55.38	13.31	20.12	1.38	1.50	1.82	4.50	4.62	2.81	3.75	11.50	7.23	2.90	1135
C70Q24BH	2102842	70	4	24	59.38	13.31	24.12	1.38	1.50	1.82	4.50	4.62	2.81	3.75	11.50	7.23	2.90	1460
C70QN20BH	2102850	70	5	20	55.38	18.23	20.12	1.38	1.50	1.82	4.50	4.62	2.81	3.75	11.50	6.41	3.30	1490
C70QN24BH	2102852	70	5	24	59.38	18.23	24.12	1.38	1.50	1.82	4.50	4.62	2.81	3.75	11.50	6.41	3.30	1900
80 Tons																		
C80T20BH	2102860	80	3	20	55.38	11.14	20.12	1.38	1.50	1.82	4.50	4.62	2.81	3.75	11.50	6.41	3.30	1070
C80Q20BH	2102870	80	4	20	55.38	13.31	20.12	1.38	1.50	1.82	4.50	4.62	2.81	3.75	11.50	7.23	2.90	1200
C80Q24BH	2102872	80	4	24	59.38	13.31	24.12	1.38	1.50	1.82	4.50	4.62	2.81	3.75	11.50	7.23	2.90	1460
C80QN20BH	2102880	80	5	20	55.38	18.23	20.12	1.38	1.50	1.82	4.50	4.62	2.81	3.75	11.50	6.41	3.30	1490
C80QN24BH	2102882	80	5	24	59.38	18.23	24.12	1.38	1.50	1.82	4.50	4.62	2.81	3.75	11.50	6.41	3.30	1900
90 Tons																		
C90Q20BH	2102920	90	4	20	55.38	13.81	20.12	1.38	1.50	1.82	4.00	4.62	2.81	3.75	11.50	6.93	2.90	1260
C90Q24BH	2102922	90	4	24	59.38	13.81	24.12	1.38	1.50	1.82	4.00	4.62	2.81	3.75	11.50	6.93	2.90	1620
C90QN20BH	2102930	90	5	20	55.38	18.23	20.12	1.38	1.50	1.82	4.00	4.62	2.81	3.75	11.50	6.07	3.30	1490
C90QN24BH	2102932	90	5	24	59.38	18.23	24.12	1.38	1.50	1.82	4.00	4.62	2.81	3.75	11.50	6.07	3.30	1960
100 Tons																		
C100QN20BH	2102970	100	5	20	55.38	18.23	20.12	1.38	1.50	1.82	4.00	4.62	2.81	3.75	11.50	6.07	3.30	1490
C100QN24BH	2102972	100	5	24	59.38	18.23	24.12	1.38	1.50	1.82	4.00	4.62	2.81	3.75	11.50	6.07	3.30	1960
C100SX20BH	2102980	100	6	20	55.38	20.41	20.12	1.38	1.50	1.82	4.00	4.62	2.81	3.75	11.50	6.93	2.90	1565
C100SX24BH	2102982	100	6	24	59.38	20.41	24.12	1.38	1.50	1.82	4.00	4.62	2.81	3.75	11.50	6.93	2.90	2055

Copyright © 2008 The Crosby Group, Inc.
All Rights Reserved

McKissick® Construction Blocks

680 BLOCKS - "S" FITTING

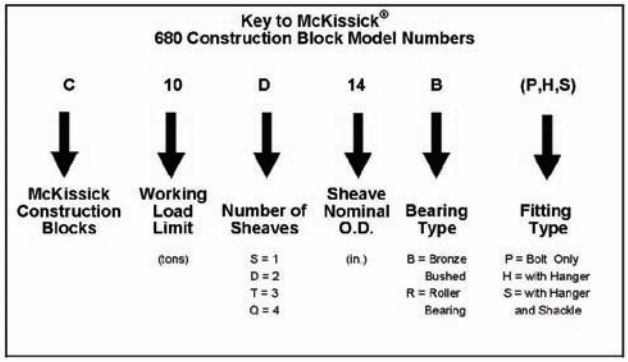

Sheave Diameter (in.)	Wire Line Size (in.)									
	3/8	7/16	1/2	9/16	5/8	3/4	7/8	1	1-1/8	1-1/4
6	■	■	■							
8	■	■	■							
10		■	■	■	■					
12			■	■	■	■				
14			■	■	■	■				
16				■	■	■	■			
18					■	■	■	■		
20						■	■	■	■	
24							■	■	■	■

"S" Fitting - Blocks with Hanger & Shackle - See Drawing on Page 301

- All sizes are **RFID EQUIPPED**.

Model No.	680-S Inquiry Stock No.	Working Load Limit (Tons)	No. of Sheaves	Sheave Diam. (in.)	Blocks with Hanger and Shackle - Dimensions (in.)												Weight Each (lbs.)
					A	E	F	G	H	I	S	T	U	V	W	X	
5 Tons																	
C5S6BS	2103000	5	1	6	18.56	2.28	6.12	--	--	--	3.81	2.56	1.14	.88	.97	--	25
C5S8BS	2103002	5	1	8	20.44	2.28	8.12	--	--	--	3.81	2.56	1.14	.88	.97	--	37
C5D6BS	2103010	5	2	6	21.19	4.31	6.12	.63	.69	.84	3.81	2.56	1.14	.88	.97	2.03	40
C5D8BS	2103012	5	2	8	23.06	4.31	8.12	.63	.69	.84	3.81	2.56	1.14	.88	.97	2.03	61
C5T6BS	2103020	5	3	6	21.19	6.34	6.12	.63	.69	.84	3.81	2.56	1.14	.88	.97	2.03	54
C5T8BS	2103022	5	3	8	23.06	6.34	8.12	.63	.69	.84	3.81	2.56	1.14	.88	.97	2.03	84
7.5 Tons																	
C7S6BS	2103050	7.5	1	6	18.56	2.28	6.12	--	--	--	3.81	2.56	1.14	.88	.97	--	25
C7S8BS	2103052	7.5	1	8	20.44	2.28	8.12	--	--	--	3.81	2.56	1.14	.88	.97	--	37
C7D6BS	2103060	7.5	2	6	21.19	4.31	6.12	.63	.69	.84	3.81	2.56	1.14	.88	.97	2.03	40
C7D8BS	2103062	7.5	2	8	23.06	4.31	8.12	.63	.69	.84	3.81	2.56	1.14	.88	.97	2.03	61
C7T6BS	2103070	7.5	3	6	21.19	6.34	6.12	.63	.69	.84	3.81	2.56	1.14	.88	.97	2.03	54
C7T8BS	2103072	7.5	3	8	23.06	6.34	8.12	.63	.69	.84	3.81	2.56	1.14	.88	.97	2.03	84
10 Tons																	
C10S8BS	2103100	10	1	8	23.12	2.28	8.12	--	--	--	4.88	3.50	1.46	1.13	1.25	--	47
C10S10BS	2103102	10	1	10	25.12	2.28	10.12	--	--	--	4.88	3.50	1.46	1.13	1.25	--	60
C10S12BS	2103104	10	1	12	27.00	2.28	12.12	--	--	--	4.88	3.50	1.46	1.13	1.25	--	70
C10S14BS	2103106	10	1	14	29.12	2.28	14.12	--	--	--	4.88	3.50	1.46	1.13	1.25	--	77
C10D6BS	2103110	10	2	6	23.69	4.31	6.12	.63	.69	.84	4.88	3.50	1.46	1.13	1.25	2.03	52
C10D8BS	2103112	10	2	8	25.44	4.31	8.12	.63	.69	.84	4.88	3.50	1.46	1.13	1.25	2.03	73
C10D10BS	2103114	10	2	10	27.44	4.31	10.12	.63	.69	.84	4.88	3.50	1.46	1.13	1.25	2.03	97
C10D12BS	2103116	10	2	12	29.31	4.31	12.12	.63	.69	.84	4.88	3.50	1.46	1.13	1.25	2.03	114
C10D14BS	2103118	10	2	14	31.44	4.31	14.12	.63	.69	.84	4.88	3.50	1.46	1.13	1.25	2.03	129
C10T8BS	2103120	10	3	8	25.44	6.34	8.12	.63	.69	.84	4.88	3.50	1.46	1.13	1.25	2.03	98
C10T10BS	2103122	10	3	10	27.44	6.34	10.12	.63	.69	.84	4.88	3.50	1.46	1.13	1.25	2.03	132
C10T12BS	2103124	10	3	12	29.31	6.34	12.12	.63	.69	.84	4.88	3.50	1.46	1.13	1.25	2.03	155
C10T14BS	2103126	10	3	14	31.44	6.34	14.12	.63	.69	.84	4.88	3.50	1.46	1.13	1.25	2.03	179
C10Q8BS	2103130	10	4	8	25.44	8.37	8.12	.63	.69	.84	4.88	3.50	1.46	1.13	1.25	2.03	123
C10Q10BS	2103132	10	4	10	27.44	8.37	10.12	.63	.69	.84	4.88	3.50	1.46	1.13	1.25	2.03	169
15 Tons																	
C15S10BS	2103170	15	1	10	29.31	3.04	10.12	--	--	--	6.00	4.12	1.81	1.38	1.50	--	102
C15S12BS	2103172	15	1	12	31.19	3.04	12.12	--	--	--	6.00	4.12	1.81	1.38	1.50	--	118
C15S14BS	2103174	15	1	14	33.19	3.04	14.12	--	--	--	6.00	4.12	1.81	1.38	1.50	--	137
C15D10BS	2103180	15	2	10	32.31	5.34	10.12	.75	.81	1.00	6.00	4.12	1.81	1.38	1.50	2.30	147
C15D12BS	2103182	15	2	12	34.19	5.34	12.12	.75	.81	1.00	6.00	4.12	1.81	1.38	1.50	2.30	170
C15D14BS	2103184	15	2	14	36.19	5.34	14.12	.75	.81	1.00	6.00	4.12	1.81	1.38	1.50	2.30	200
C15T8BS	2103190	15	3	8	30.31	7.64	8.12	.75	.81	1.00	6.00	4.12	1.81	1.38	1.50	2.30	143
C15T10BS	2103192	15	3	10	32.31	7.64	10.12	.75	.81	1.00	6.00	4.12	1.81	1.38	1.50	2.30	190
C15T12BS	2103194	15	3	12	34.19	7.64	12.12	.75	.81	1.00	6.00	4.12	1.81	1.38	1.50	2.30	220
C15T14BS	2103196	15	3	14	36.19	7.64	14.12	.75	.81	1.00	6.00	4.12	1.81	1.38	1.50	2.30	252
C15Q10BS	2103200	15	4	10	32.31	9.94	10.12	.75	.81	1.00	6.00	4.12	1.81	1.38	1.50	2.30	232
20 Tons																	
C20S18BS	2103244	20	1	18	38.56	4.04	18.12	--	--	--	6.56	4.68	1.94	1.50	1.62	--	236
C20D12BS	2103250	20	2	12	38.38	5.84	12.12	.88	.97	1.14	6.56	4.68	1.94	1.50	1.62	2.30	203

Copyright © 2008 The Crosby Group, Inc.
All Rights Reserved

McKissick® Construction Blocks

Model No.	680-S Inquiry Stock No.	Working Load Limit (Tons)	No. of Sheaves	Sheave Diam. (in.)	Blocks with Hanger and Shackle - Dimensions (in.)												Weight Each (lbs.)
					A	E	F	G	H	I	S	T	U	V	W	X	
C20D14BS	2103252	20	2	14	39.19	5.84	14.12	.88	.97	1.14	6.56	4.68	1.94	1.50	1.62	2.30	235
C20D16BS	2103254	20	2	16	41.44	5.84	16.12	.88	.97	1.14	6.56	4.68	1.94	1.50	1.62	2.30	275
C20T10BS	2103260	20	3	10	35.44	8.14	10.12	.88	.97	1.14	6.56	4.68	1.94	1.50	1.62	2.30	221
C20T12BS	2103262	20	3	12	37.38	8.14	12.12	.88	.97	1.14	6.56	4.68	1.94	1.50	1.62	2.30	250
C20T14BS	2103264	20	3	14	39.19	8.14	14.12	.88	.97	1.14	6.56	4.68	1.94	1.50	1.62	2.30	296
C20T16BS	2103266	20	3	16	41.44	8.14	16.12	.88	.97	1.14	6.56	4.68	1.94	1.50	1.62	2.30	350
C20Q8BS	2103270	20	4	8	33.25	10.44	8.12	.88	.97	1.14	6.56	4.68	1.94	1.50	1.62	2.30	217
C20Q10BS	2103272	20	4	10	35.44	10.44	10.12	.88	.97	1.14	6.56	4.68	1.94	1.50	1.62	2.30	268
C20Q12BS	2103274	20	4	12	37.38	10.44	12.12	.88	.97	1.14	6.56	4.68	1.94	1.50	1.62	2.30	308
C20Q14BS	2103276	20	4	14	39.19	10.44	14.12	.88	.97	1.14	6.56	4.68	1.94	1.50	1.62	2.30	358
25 Tons																	
C25S18BS	2103314	25	1	18	38.56	4.04	18.12	--	--	--	6.56	4.68	1.94	1.50	1.62	--	236
C25D12BS	2103320	25	2	12	38.38	5.84	12.12	.88	.97	1.14	6.56	4.68	1.94	1.50	1.62	2.30	203
C25D14BS	2103322	25	2	14	39.19	5.84	14.12	.88	.97	1.14	6.56	4.68	1.94	1.50	1.62	2.30	235
C25D16BS	2103324	25	2	16	41.44	5.84	16.12	.88	.97	1.14	6.56	4.68	1.94	1.50	1.62	2.30	275
C25T10BS	2103330	25	3	10	35.44	8.14	10.12	.88	.97	1.14	6.56	4.68	1.94	1.50	1.62	2.30	221
C25T12BS	2103332	25	3	12	37.38	8.14	12.12	.88	.97	1.14	6.56	4.68	1.94	1.50	1.62	2.30	250
C25T14BS	2103334	25	3	14	39.19	8.14	14.12	.88	.97	1.14	6.56	4.68	1.94	1.50	1.62	2.30	296
C25T16BS	2103336	25	3	16	41.44	8.14	16.12	.88	.97	1.14	6.56	4.68	1.94	1.50	1.62	2.30	350
C25Q8BS	2103340	25	4	8	33.25	10.44	8.12	.88	.97	1.14	6.56	4.68	1.94	1.50	1.62	2.30	217
C25Q10BS	2103342	25	4	10	35.44	10.44	10.12	.88	.97	1.14	6.56	4.68	1.94	1.50	1.62	2.30	268
C25Q12BS	2103344	25	4	12	37.38	10.44	12.12	.88	.97	1.14	6.56	4.68	1.94	1.50	1.62	2.30	308
C25Q14BS	2103346	25	4	14	39.19	10.44	14.12	.88	.97	1.14	6.56	4.68	1.94	1.50	1.62	2.30	358
30 Tons																	
C30D12BS	2103390	30	2	12	41.06	6.84	12.12	1.00	1.06	1.34	6.56	4.06	1.94	1.50	1.62	2.80	245
C30D14BS	2103392	30	2	14	42.94	6.84	14.12	1.00	1.06	1.34	6.56	4.06	1.94	1.50	1.62	2.80	281
C30D16BS	2103394	30	2	16	45.31	6.84	16.12	1.00	1.06	1.34	6.56	4.06	1.94	1.50	1.62	2.80	323
C30D18BS	2103396	30	2	18	47.06	6.84	18.12	1.00	1.06	1.34	6.56	4.06	1.94	1.50	1.62	2.80	400
C30T10BS	2103400	30	3	10	39.19	8.14	10.12	1.00	1.06	1.34	6.56	4.06	1.94	1.50	1.62	2.80	274
C30T12BS	2103402	30	3	12	41.06	8.14	12.12	1.00	1.06	1.34	6.56	4.06	1.94	1.50	1.62	2.80	300
C30T14BS	2103404	30	3	14	42.94	8.14	14.12	1.00	1.06	1.34	6.56	4.06	1.94	1.50	1.62	2.80	343
C30T16BS	2103406	30	3	16	45.60	8.14	16.12	1.00	1.06	1.34	6.56	4.06	1.94	1.50	1.62	2.80	405
C30Q10BS	2103410	30	4	10	47.06	10.44	10.12	1.00	1.06	1.34	6.56	4.06	1.94	1.50	1.62	2.80	327
C30Q12BS	2103412	30	4	12	41.06	10.44	12.12	1.00	1.06	1.34	6.56	4.06	1.94	1.50	1.62	2.80	363
C30Q14BS	2103414	30	4	14	42.94	10.44	14.12	1.00	1.06	1.34	6.56	4.06	1.94	1.50	1.62	2.80	414
C30Q16BS	2103416	30	4	16	45.31	10.44	16.12	1.00	1.06	1.34	6.56	4.06	1.94	1.50	1.62	2.80	390
35 Tons																	
C35D12BS	2103450	35	2	12	41.06	6.84	12.12	1.00	1.06	1.34	6.56	4.06	1.94	1.50	1.62	2.80	245
C35D14BS	2103452	35	2	14	42.94	6.84	14.12	1.00	1.06	1.34	6.56	4.06	1.94	1.50	1.62	2.80	281
C35D16BS	2103454	35	2	16	45.31	6.84	16.12	1.00	1.06	1.34	6.56	4.06	1.94	1.50	1.62	2.80	323
C35D18BS	2103456	35	2	18	47.06	6.84	18.12	1.00	1.06	1.34	6.56	4.06	1.94	1.50	1.62	2.80	400
C35T10BS	2103460	35	3	10	39.19	8.14	10.12	1.00	1.06	1.34	6.56	4.06	1.94	1.50	1.62	2.80	274
C35T12BS	2103462	35	3	12	41.06	8.14	12.12	1.00	1.06	1.34	6.56	4.06	1.94	1.50	1.62	2.80	300
C35T14BS	2103464	35	3	14	42.94	8.14	14.12	1.00	1.06	1.34	6.56	4.06	1.94	1.50	1.62	2.30	343
C35T16BS	2103466	35	3	16	45.31	8.14	16.12	1.00	1.06	1.34	6.56	4.06	1.94	1.50	1.62	2.30	405
C35Q10BS	2103470	35	4	10	47.06	10.44	10.12	1.00	1.06	1.34	6.56	4.06	1.94	1.50	1.62	2.30	327
C35Q12BS	2103472	35	4	12	41.06	10.44	12.12	1.00	1.06	1.34	6.56	4.06	1.94	1.50	1.62	2.30	363
C35Q14BS	2103474	35	4	14	42.94	10.44	14.12	1.00	1.06	1.34	6.56	4.06	1.94	1.50	1.62	2.30	414
C35Q16BS	2103476	35	4	16	45.31	10.44	16.12	1.00	1.06	1.34	6.56	4.06	1.94	1.50	1.62	2.30	490
40 Tons																	
C40D18BS	2103512	40	2	18	50.25	7.84	18.12	1.13	1.25	1.46	8.00	5.12	2.50	1.75	2.25	3.30	562
C40D20BS	2103514	40	2	20	51.50	7.84	20.12	1.13	1.25	1.46	8.00	5.12	2.50	1.75	2.25	3.30	651
C40D24BS	2103516	40	2	24	55.50	7.84	24.12	1.13	1.25	1.46	8.00	5.12	2.50	1.75	2.25	3.30	830
C40T14BS	2103520	40	3	14	47.50	8.14	14.12	1.13	1.25	1.46	8.00	5.12	2.50	1.75	2.25	2.30	390
C40T16BS	2103522	40	3	16	49.75	8.14	16.12	1.13	1.25	1.46	8.00	5.12	2.50	1.75	2.25	2.30	450
C40T18BS	2103524	40	3	18	50.25	10.40	18.12	1.13	1.25	1.46	8.00	5.12	2.50	1.75	2.25	2.90	680
C40T20BS	2103526	40	3	20	51.50	10.40	20.12	1.13	1.25	1.46	8.00	5.12	2.50	1.75	2.25	2.90	790
C40Q12BS	2103530	40	4	12	45.62	10.44	12.12	1.13	1.25	1.46	8.00	5.12	2.50	1.75	2.25	2.30	422
C40Q14BS	2103532	40	4	14	47.50	10.44	14.12	1.13	1.25	1.46	8.00	5.12	2.50	1.75	2.25	2.30	466
C40Q16BS	2103534	40	4	16	49.75	10.44	16.12	1.13	1.25	1.46	8.00	5.12	2.50	1.75	2.25	2.30	535
C40Q18BS	2103536	40	4	18	50.25	13.33	18.12	1.13	1.25	1.46	8.00	5.12	2.50	1.75	2.25	2.90	800
45 Tons																	
C45D18BS	2103582	45	2	18	50.25	7.84	18.12	1.13	1.25	1.46	8.00	5.12	2.50	1.75	2.25	3.30	562
C45D20BS	2103584	45	2	20	51.50	7.84	20.12	1.13	1.25	1.46	8.00	5.12	2.50	1.75	2.25	3.30	651
C45D24BS	2103586	45	2	24	55.50	7.84	24.12	1.13	1.25	1.46	8.00	5.12	2.50	1.75	2.25	3.30	830
C45T14BS	2103590	45	3	14	47.50	8.14	14.12	1.13	1.25	1.46	8.00	5.12	2.50	1.75	2.25	2.30	390
C45T16BS	2103592	45	3	16	49.75	8.14	16.12	1.13	1.25	1.46	8.00	5.12	2.50	1.75	2.25	2.30	450
C45T18BS	2103594	45	3	18	50.25	10.40	18.12	1.13	1.25	1.46	8.00	5.12	2.50	1.75	2.25	2.90	680
C45T20BS	2103596	45	3	20	51.50	10.40	20.12	1.13	1.25	1.46	8.00	5.12	2.50	1.75	2.25	2.90	790
C45Q12BS	2103600	45	4	12	45.62	10.44	12.12	1.13	1.25	1.46	8.00	5.12	2.50	1.75	2.25	2.30	422
C45Q14BS	2103602	45	4	14	47.50	10.44	14.12	1.13	1.25	1.46	8.00	5.12	2.50	1.75	2.25	2.30	466

Copyright © 2008 The Crosby Group, Inc.
All Rights Reserved

McKissick® Construction Blocks

Model No.	680-S Inquiry Stock No.	Working Load Limit (Tons)	No. of Sheaves	Sheave Diam. (in.)	Blocks with Hanger and Shackle - Dimensions (in.)												Weight Each (lbs.)
					A	E	F	G	H	I	S	T	U	V	W	X	
C45Q16BS	2103604	45	4	16	49.75	10.44	16.12	1.13	1.25	1.46	8.00	5.12	2.50	1.75	2.25	2.30	535
C45Q18BS	2103606	45	4	18	50.25	13.33	18.12	1.13	1.25	1.46	8.00	5.12	2.50	1.75	2.25	2.90	800
50 Tons																	
C50D20BS	2103640	50	2	20	56.81	7.84	20.12	1.25	1.38	1.62	8.88	5.63	2.88	2.00	2.40	3.30	740
C50D24BS	2103642	50	2	24	60.81	7.84	24.12	1.25	1.38	1.62	8.88	5.63	2.88	2.00	2.40	3.30	923
C50T18BS	2103650	50	3	18	55.56	10.40	18.12	1.25	1.38	1.62	8.88	5.25	2.88	2.00	2.40	2.90	752
C50T20BS	2103652	50	3	20	56.81	10.40	20.12	1.25	1.38	1.62	8.88	5.25	2.88	2.00	2.40	2.90	864
C50T24BS	2103654	50	3	24	60.81	10.40	24.12	1.25	1.38	1.62	8.88	5.25	2.88	2.00	2.40	2.90	1077
C50Q16BS	2103660	50	4	16	53.44	13.33	16.12	1.25	1.38	1.62	8.88	5.25	2.88	2.00	2.40	2.90	780
C50Q18BS	2103662	50	4	18	55.56	13.33	18.12	1.25	1.38	1.62	8.88	5.25	2.88	2.00	2.40	2.90	930
55 Tons																	
C55D20BS	2103700	55	2	20	56.81	7.84	20.12	1.25	1.38	1.62	8.88	5.63	2.88	2.00	2.40	3.30	740
C55D24BS	2103702	55	2	24	60.81	7.84	24.12	1.25	1.38	1.62	8.88	5.63	2.88	2.00	2.40	3.30	923
C55T18BS	2103710	55	3	18	55.56	10.40	18.12	1.25	1.38	1.62	8.88	5.25	2.88	2.00	2.40	2.90	752
C55T20BS	2103712	55	3	20	56.81	10.40	20.12	1.25	1.38	1.62	8.88	5.25	2.88	2.00	2.40	2.90	864
C55T24BS	2103714	55	3	24	60.81	10.40	24.12	1.25	1.38	1.62	8.88	5.25	2.88	2.00	2.40	2.90	1077
C55Q16BS	2103720	55	4	16	53.44	13.33	16.12	1.25	1.38	1.62	8.88	5.25	2.88	2.00	2.40	2.90	780
C55Q18BS	2103722	55	4	18	55.56	13.33	18.12	1.25	1.38	1.62	8.88	5.25	2.88	2.00	2.40	2.90	930
60 Tons																	
C60T18BS	2103760	60	3	18	55.56	10.40	18.12	1.25	1.38	1.62	8.88	5.25	2.88	2.00	2.40	2.90	752
C60T20BS	2103762	60	3	20	56.75	10.40	20.12	1.25	1.38	1.62	8.88	5.25	2.88	2.00	2.40	2.90	864
C60T24BS	2103764	60	3	24	60.75	10.40	24.12	1.25	1.38	1.62	8.88	5.25	2.88	2.00	2.40	2.90	1077
C60Q18BS	2103770	60	4	18	55.56	13.33	18.12	1.25	1.38	1.62	8.88	5.25	2.88	2.00	2.40	2.90	930
C60Q20BS	2103772	60	4	20	56.75	13.33	20.12	1.25	1.38	1.62	8.88	5.25	2.88	2.00	2.40	2.90	1080
C60Q24BS	2103774	60	4	24	60.75	13.33	24.12	1.25	1.38	1.62	8.88	5.25	2.88	2.00	2.40	2.90	1290
65 Tons																	
C65T18BS	2103810	65	3	18	55.56	10.40	18.12	1.25	1.38	1.62	8.88	5.25	2.88	2.00	2.40	2.90	752
C65T20BS	2103812	65	3	20	56.75	10.40	20.12	1.25	1.38	1.62	8.88	5.25	2.88	2.00	2.40	2.90	864
C65T24BS	2103814	65	3	24	60.75	10.40	24.12	1.25	1.38	1.62	8.88	5.25	2.88	2.00	2.40	2.90	1077
C65Q18BS	2103820	65	4	18	55.56	13.33	18.12	1.25	1.38	1.62	8.88	5.25	2.88	2.00	2.40	2.90	930
C65Q20BS	2103822	65	4	20	56.75	13.33	20.12	1.25	1.38	1.62	8.88	5.25	2.88	2.00	2.40	2.90	1080
C65Q24BS	2103824	65	4	24	60.75	13.33	24.12	1.25	1.38	1.62	8.88	5.25	2.88	2.00	2.40	2.90	1290
70 Tons																	
C70T20BS	2103830	70	3	20	65.75	11.14	20.12	1.38	1.50	1.82	11.88	7.25	3.62	2.71	3.12	3.30	1170
C70Q20BS	2103840	70	4	20	65.75	13.31	20.12	1.38	1.50	1.82	11.88	7.25	3.62	2.71	3.12	2.90	1235
C70Q24BS	2103842	70	4	24	69.75	13.31	24.12	1.38	1.50	1.82	11.88	7.25	3.62	2.71	3.12	2.90	1560
C70QN20BS	2103850	70	5	20	65.75	18.23	20.12	1.38	1.50	1.82	11.88	7.25	3.62	2.71	3.12	3.30	1590
C70QN24BS	2103852	70	5	24	69.75	18.23	24.12	1.38	1.50	1.82	11.88	7.25	3.62	2.71	3.12	3.30	2000
80 Tons																	
C80T20BS	2103860	80	3	20	65.75	11.14	20.12	1.38	1.50	1.82	11.88	7.25	3.62	2.71	3.12	3.30	1170
C80Q20BS	2103870	80	4	20	65.75	13.31	20.12	1.38	1.50	1.82	11.88	7.25	3.62	2.71	3.12	2.90	1300
C80Q24BS	2103872	80	4	24	69.75	13.31	24.12	1.38	1.50	1.82	11.88	7.25	3.62	2.71	3.12	2.90	1560
C80QN20BS	2103880	80	5	20	65.75	18.23	20.12	1.38	1.50	1.82	11.88	7.25	3.62	2.71	3.12	3.30	1590
C80QN24BS	2103882	80	5	24	69.75	18.23	24.12	1.38	1.50	1.82	11.88	7.25	3.62	2.71	3.12	3.30	2000
90 Tons																	
C90Q20BS	2103920	90	4	20	65.75	13.81	20.12	1.38	1.50	1.82	11.88	7.25	3.62	2.71	3.12	2.90	1360
C90Q24BS	2103922	90	4	24	69.75	13.81	24.12	1.38	1.50	1.82	11.88	7.25	3.62	2.71	3.12	2.90	1720
C90QN20BS	2103930	90	5	20	65.75	18.23	20.12	1.38	1.50	1.82	11.88	7.25	3.62	2.71	3.12	3.30	1590
C90QN24BS	2103932	90	5	24	69.75	18.23	24.12	1.38	1.50	1.82	11.88	7.25	3.62	2.71	3.12	3.30	2060
100 Tons																	
C100QN20BS	2103970	100	5	20	65.75	18.23	20.12	1.38	1.50	1.82	11.88	7.25	3.62	2.71	3.12	3.30	1590
C100QN24BS	2103972	100	5	24	69.75	18.23	24.12	1.38	1.50	1.82	11.88	7.25	3.62	2.71	3.12	3.30	2060
C100SX20BS	2103980	100	6	20	65.75	20.41	20.12	1.38	1.50	1.82	11.88	7.25	3.62	2.71	3.12	2.90	1665
C100SX24BS	2103982	100	6	24	69.75	20.41	24.12	1.38	1.50	1.82	11.88	7.25	3.62	2.71	3.12	2.90	2155

SELS
SELBY ENGINEERING & LIFTING SAFETY LTD.
Lifting Equipment and Height Safety Specialists
www.liftingsafety.co.uk sales@liftingsafety.co.uk
Tel: +44 (0) 1977 684 600 Fax: +44 (0) 1977 685 300

Copyright © 2008 The Crosby Group, Inc.
All Rights Reserved